CV 281/282 110CN

en **Installation instructions**

zh **安装说明**

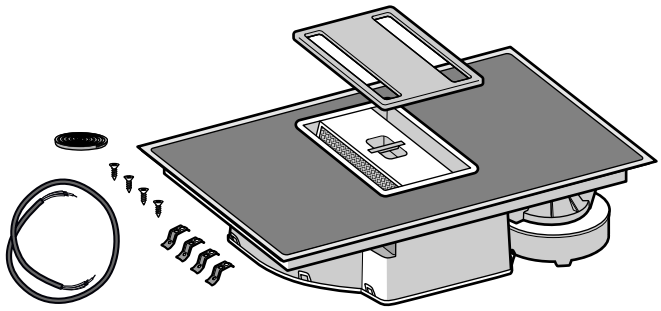

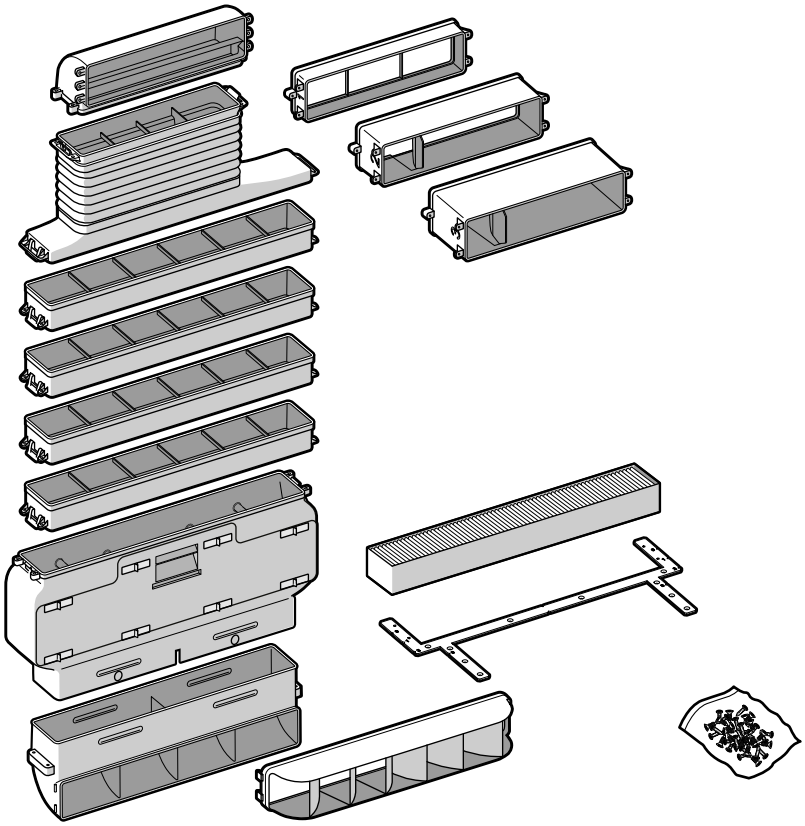

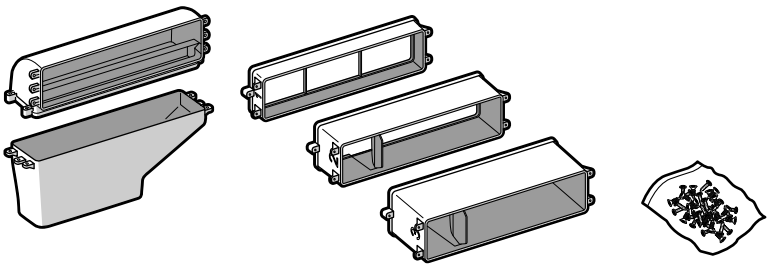

A

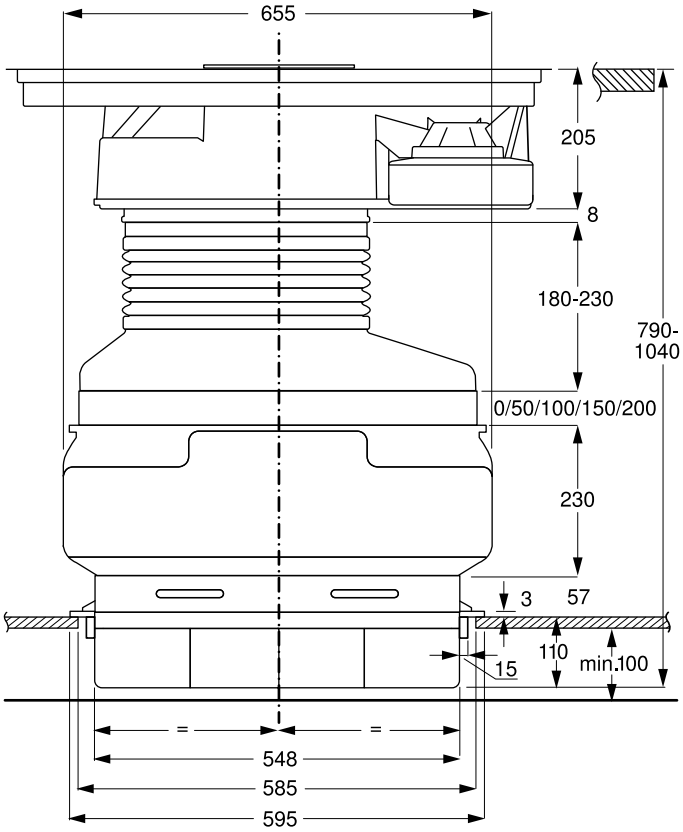
655
205
8
180-230
790-
1040
0/50/100/150/200
230
3
57
110
min.100
15
548
585
595

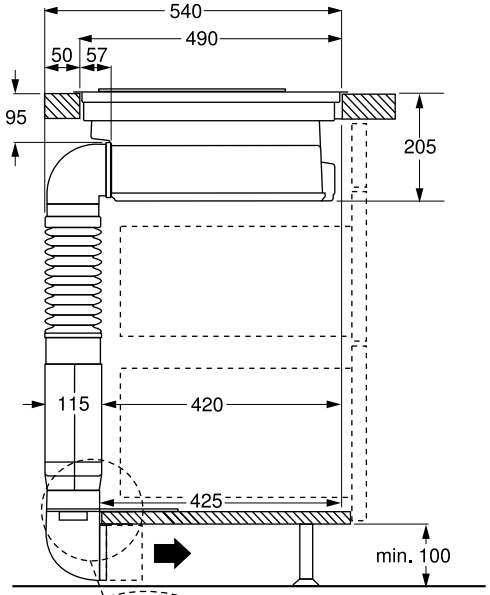
540
490
50
57
95
205
115
420
425
min. 100

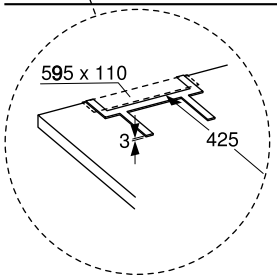
595 x 110
3
425

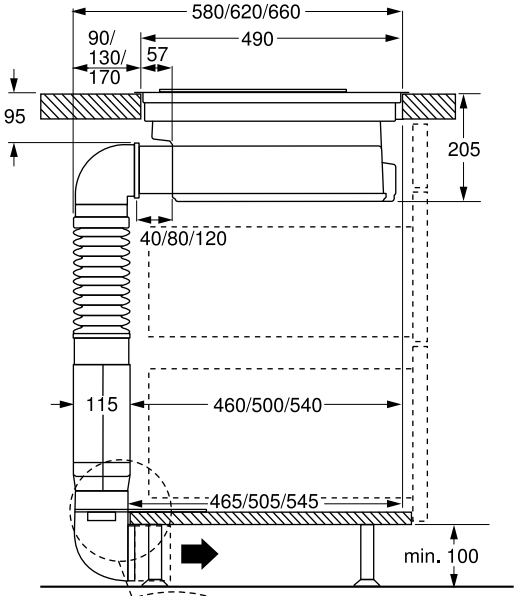
580/620/660
490
90/
130/
170
57
95
205
40/80/120
115
460/500/540
465/505/545
min. 100

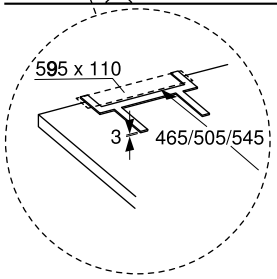
595 x 110
3
465/505/545

B

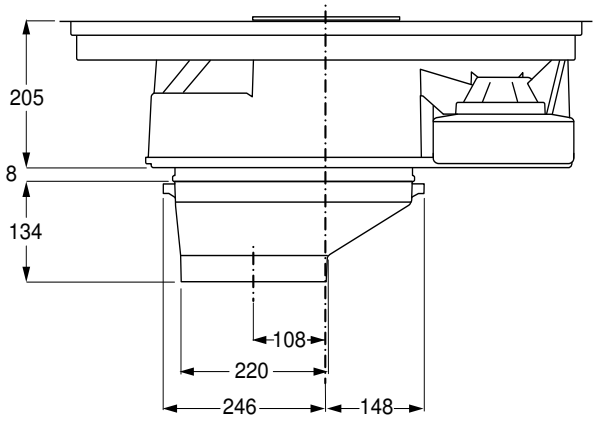
205
8
134
108
220
246
148

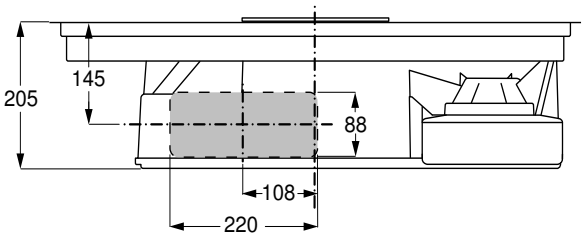
205
145
88
108
220

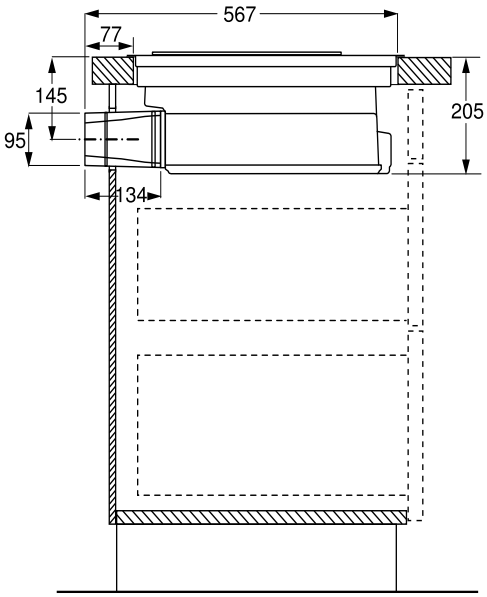
567
77
145
95
205
134

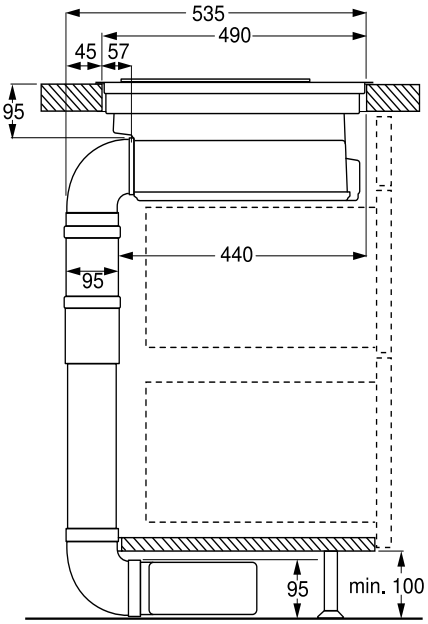
535
490
45
57
95
440
95
95
min. 100

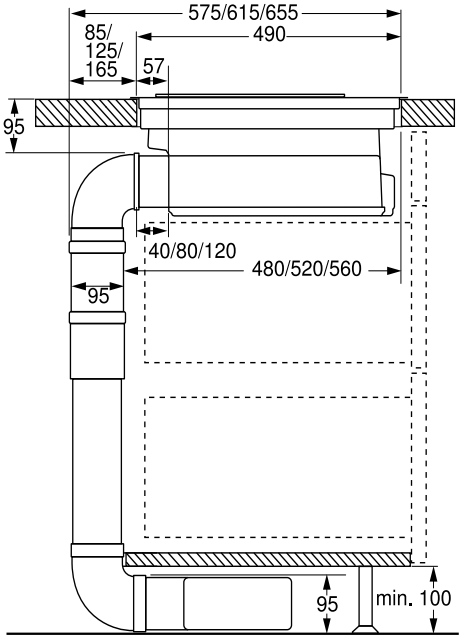
575/615/655
85/
125/
165
490
57
95
40/80/120
480/520/560
95
95
min. 100

C

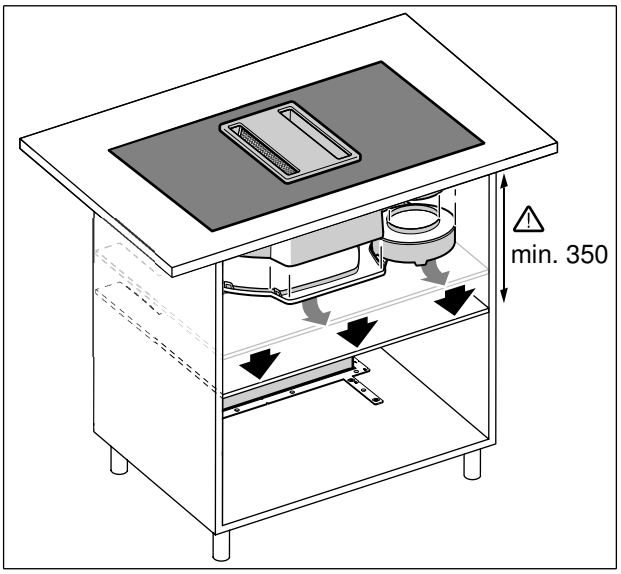
min. 350

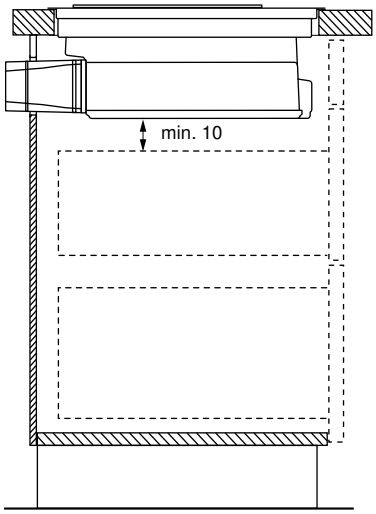
min. 10

1

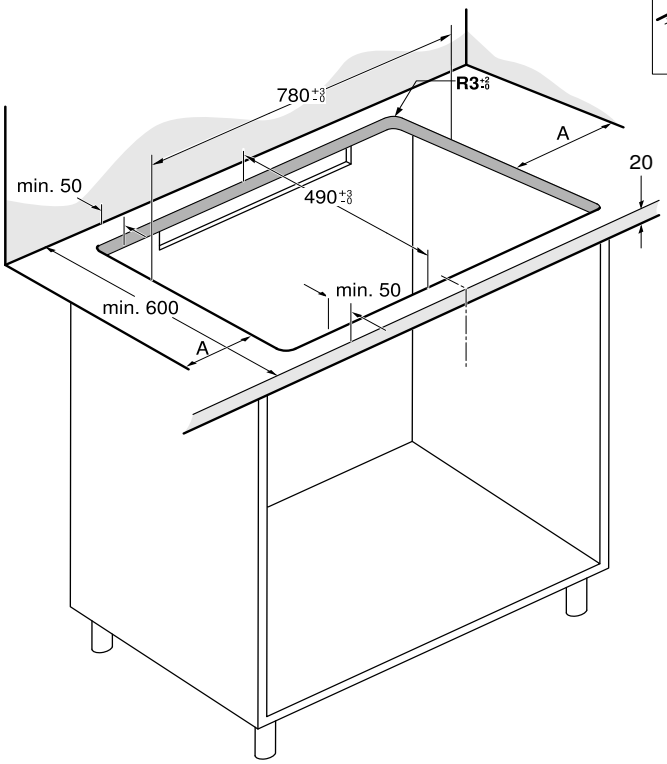

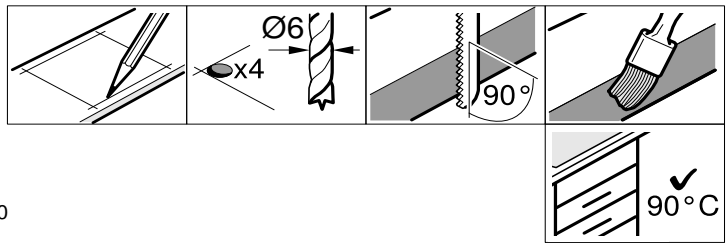

A = min. 40

2a

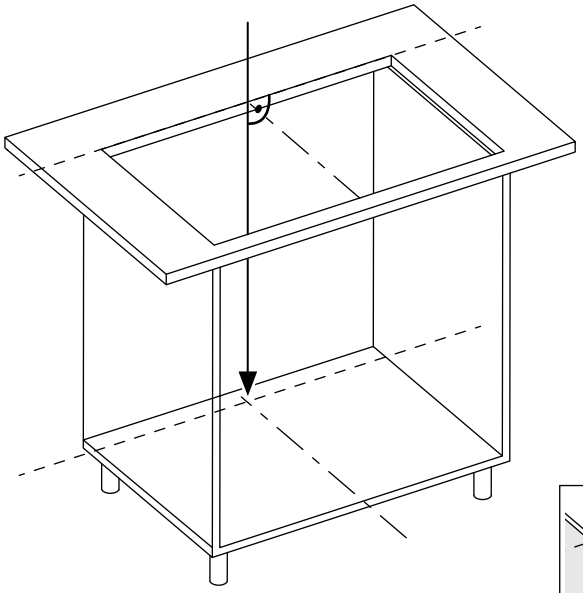

2b

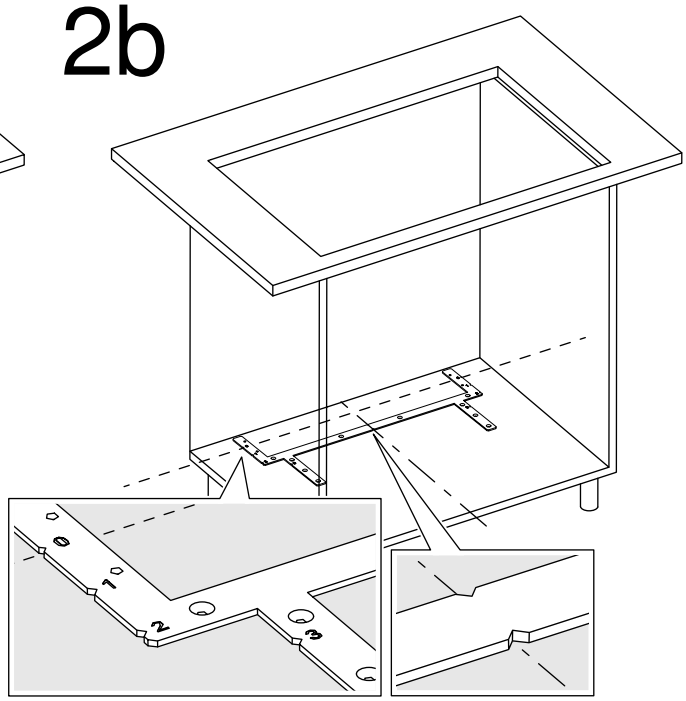

2c

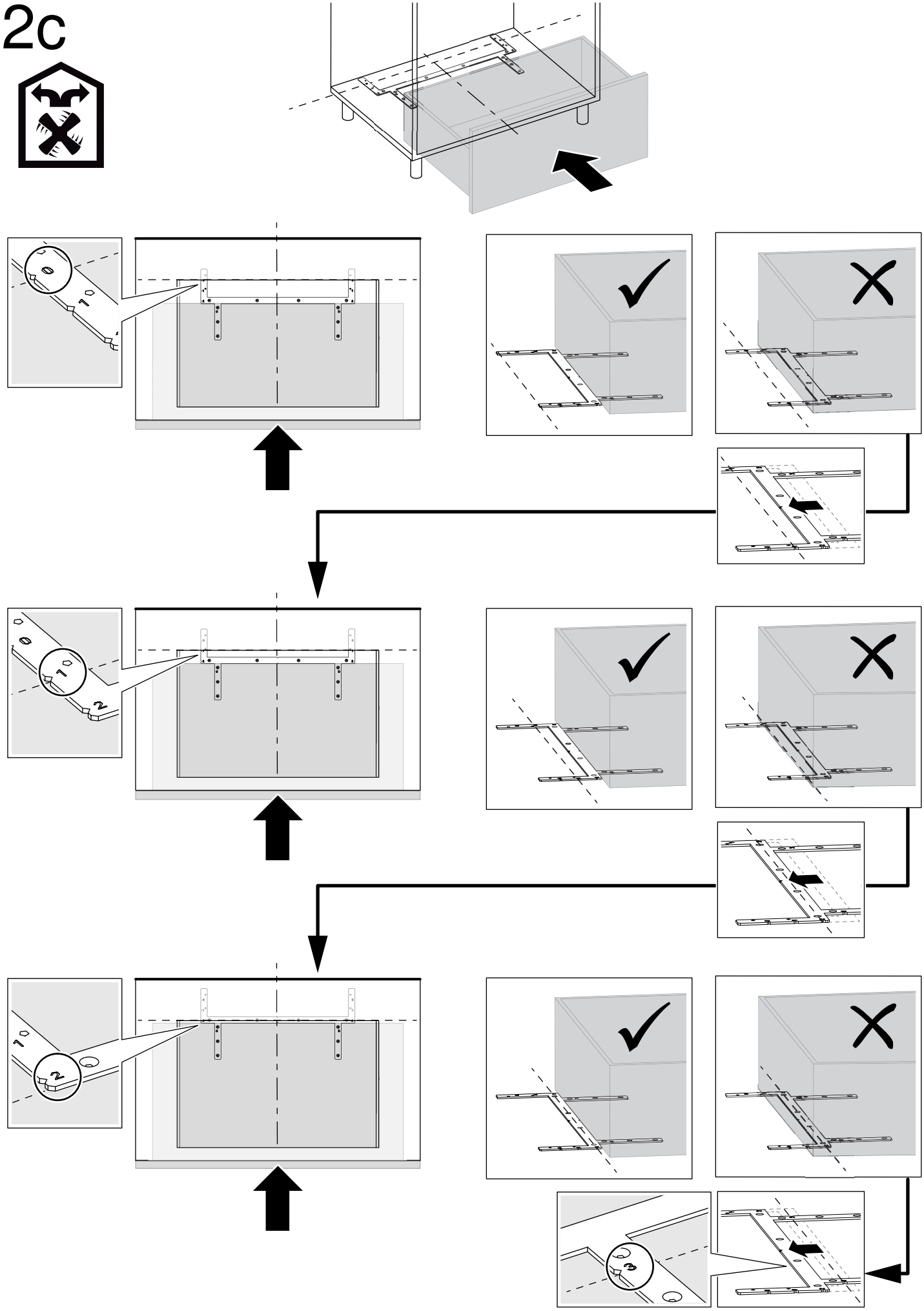

2d

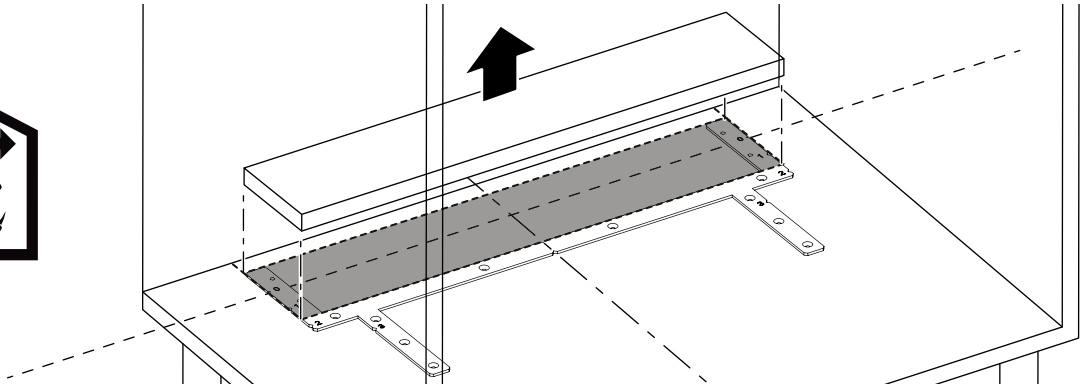

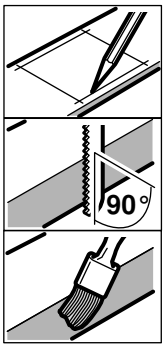

3a

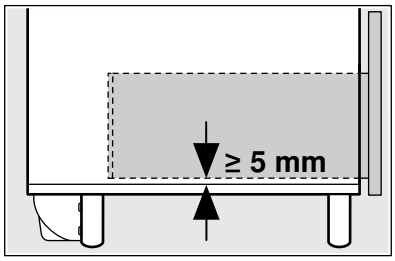

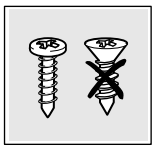

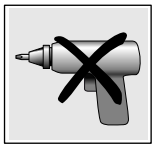

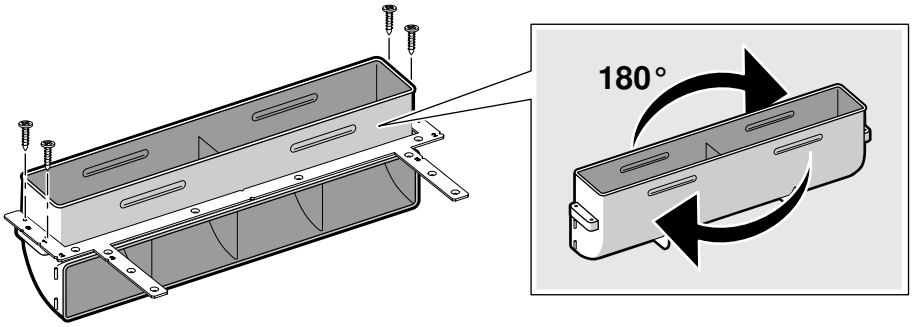

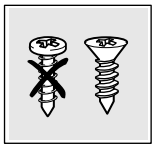

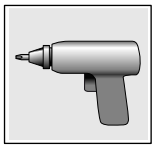

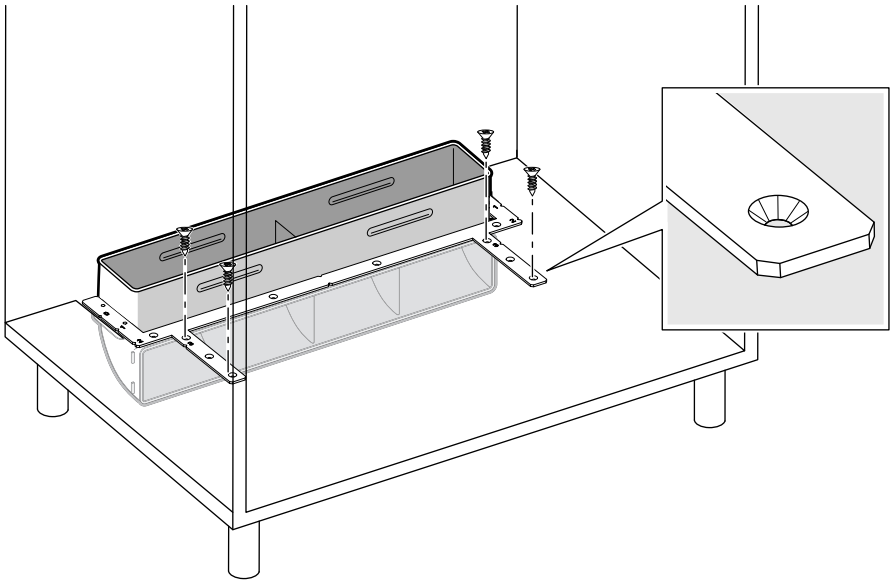

3b

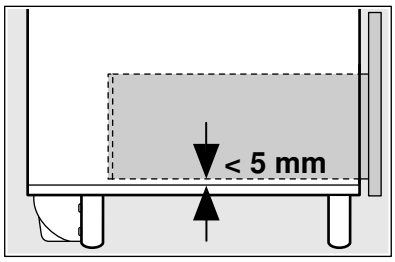

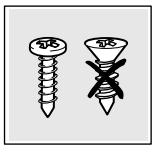

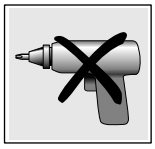

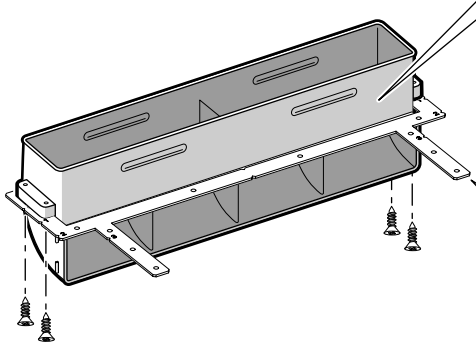

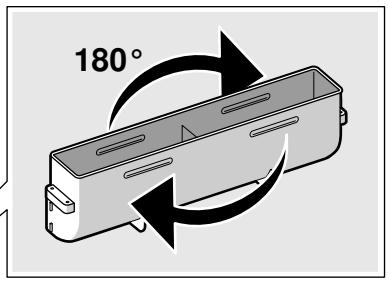

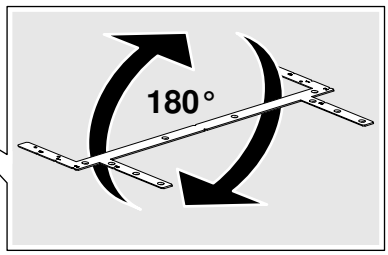

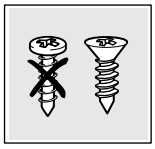

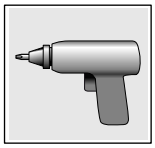

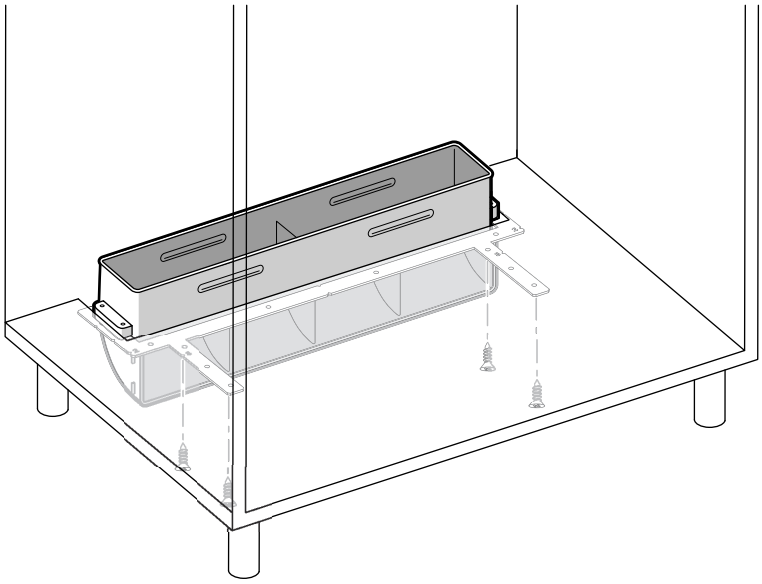

3c

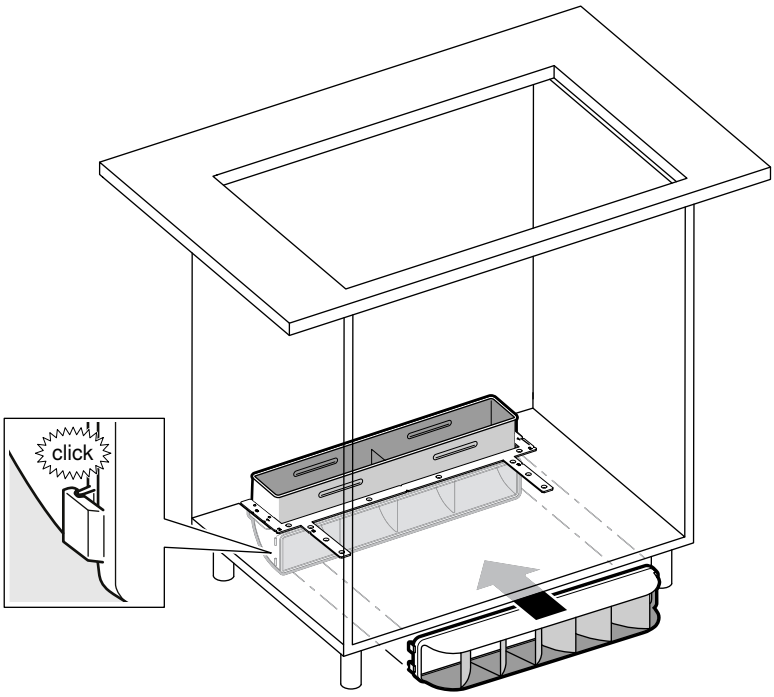

4

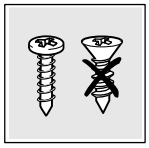

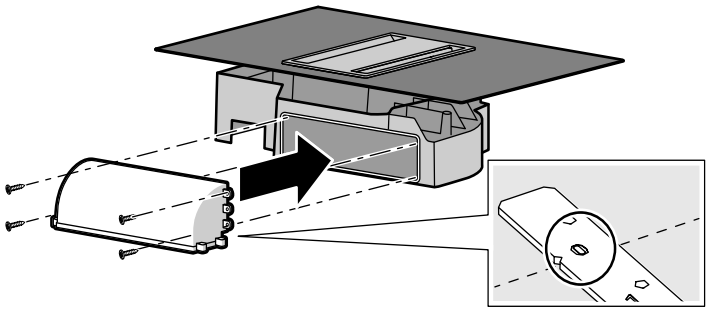

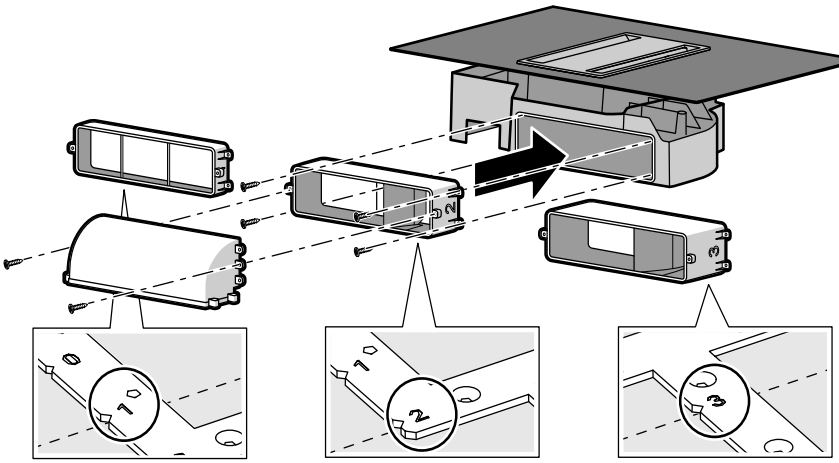

5

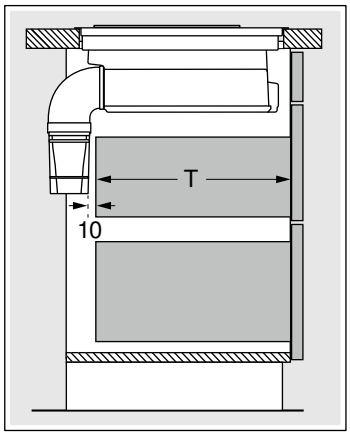

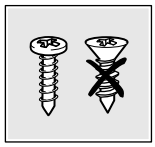

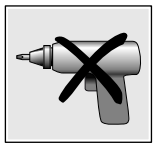

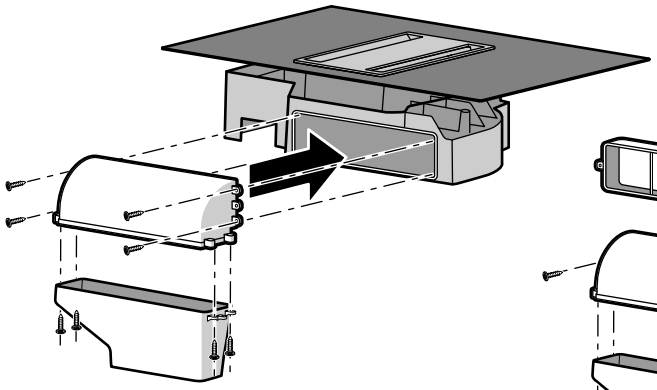

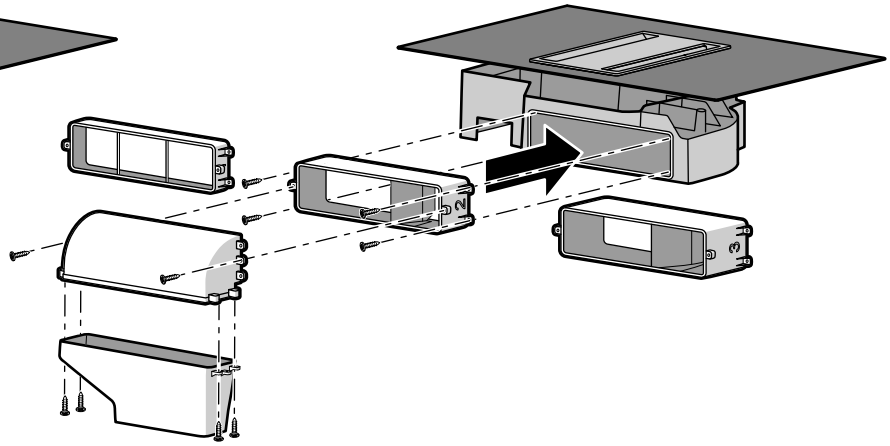

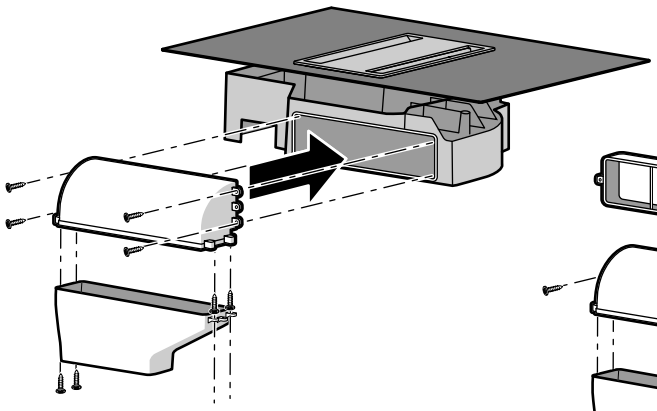

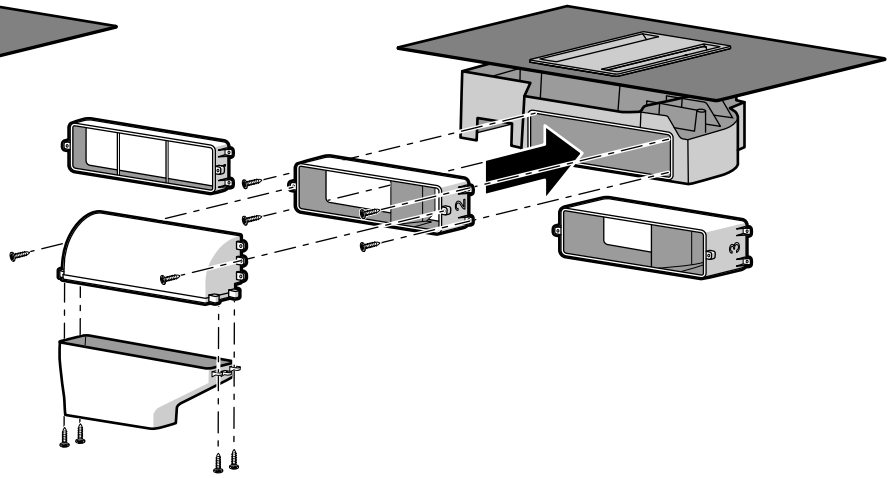

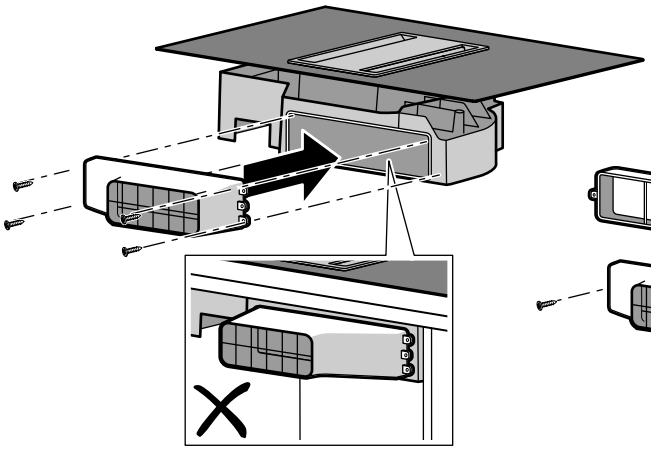

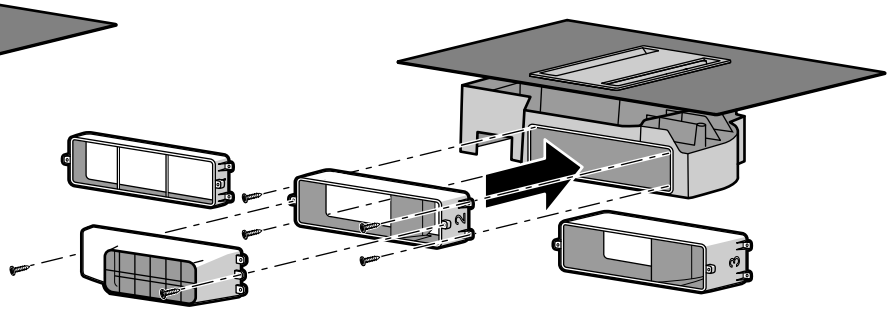

6

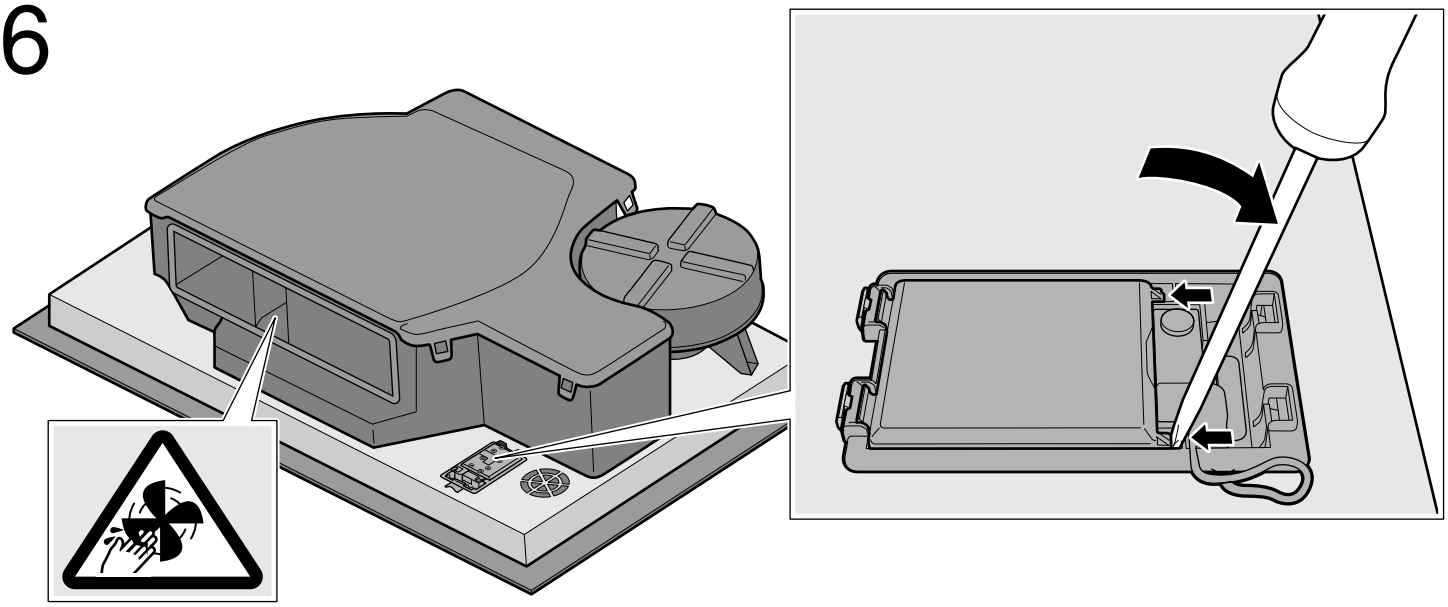

7

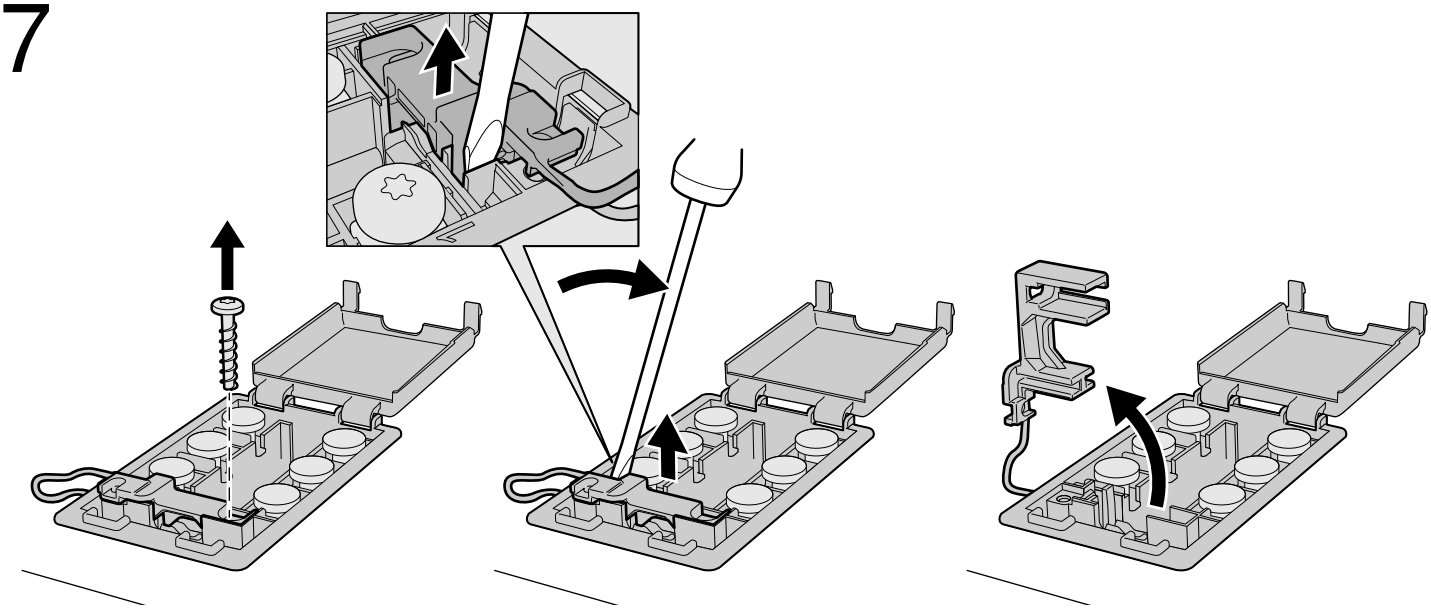

8

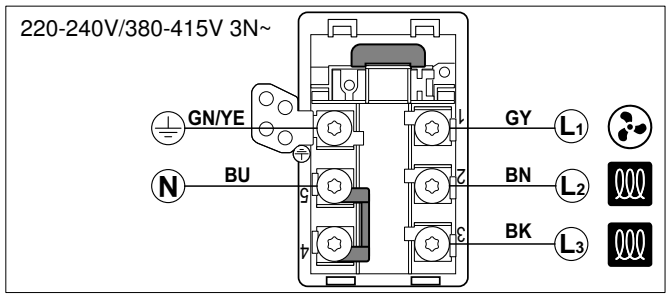
220-240V/380-415V 3N~
GN/YE
N
BU
GY
BN
BK
L1
L2
L3

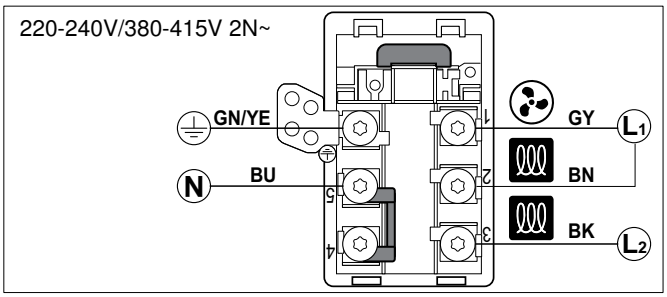
220-240V/380-415V 2N~
GN/YE
N
BU
GY
BN
BK
L1
L2

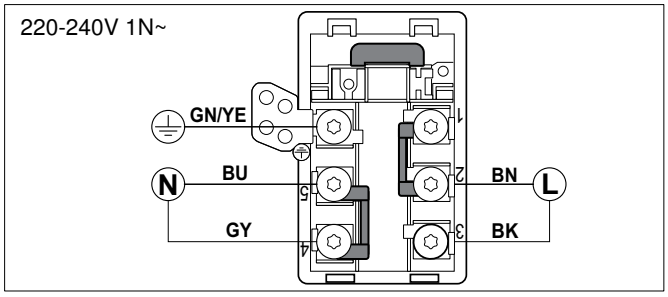
220-240V 1N~
GN/YE
N
BU
GY
BN
BK
L

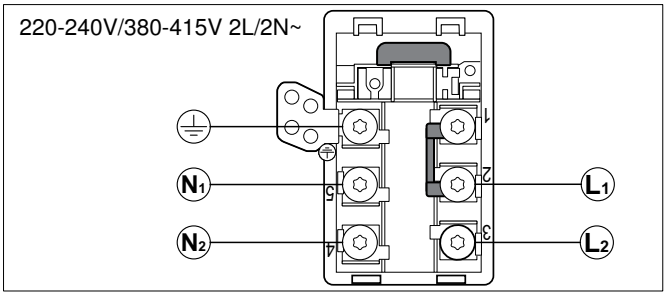
220-240V/380-415V 2L/2N~
N1
N2
L1
L2

9

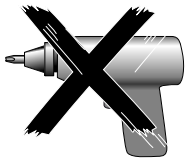

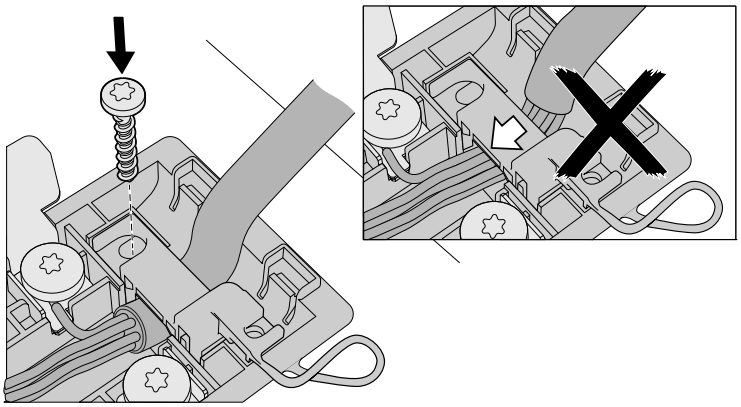

10a

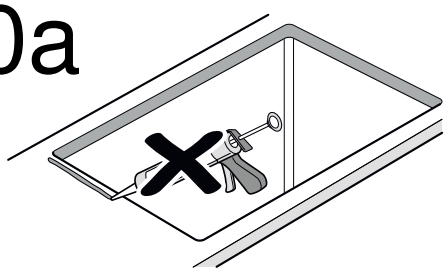

10b

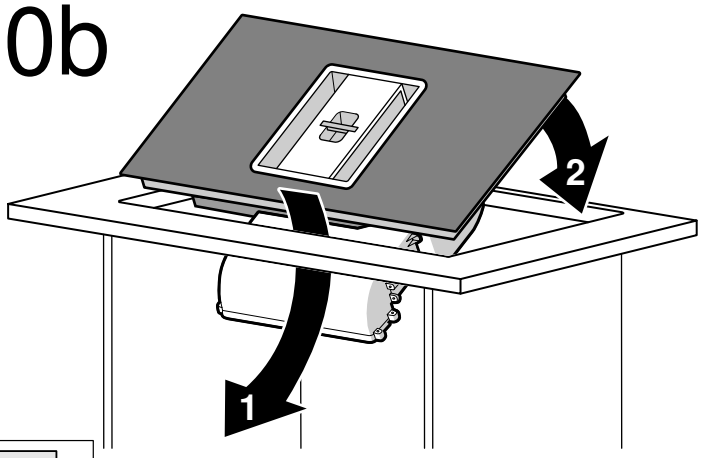

10c

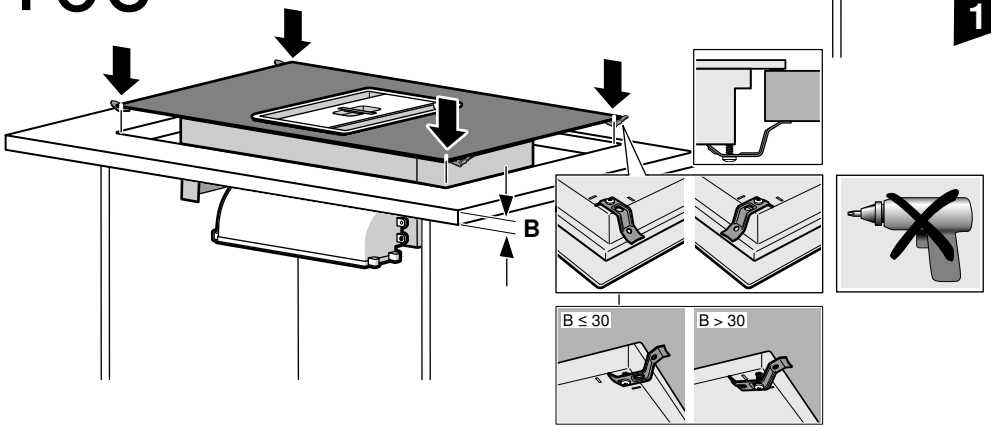

11

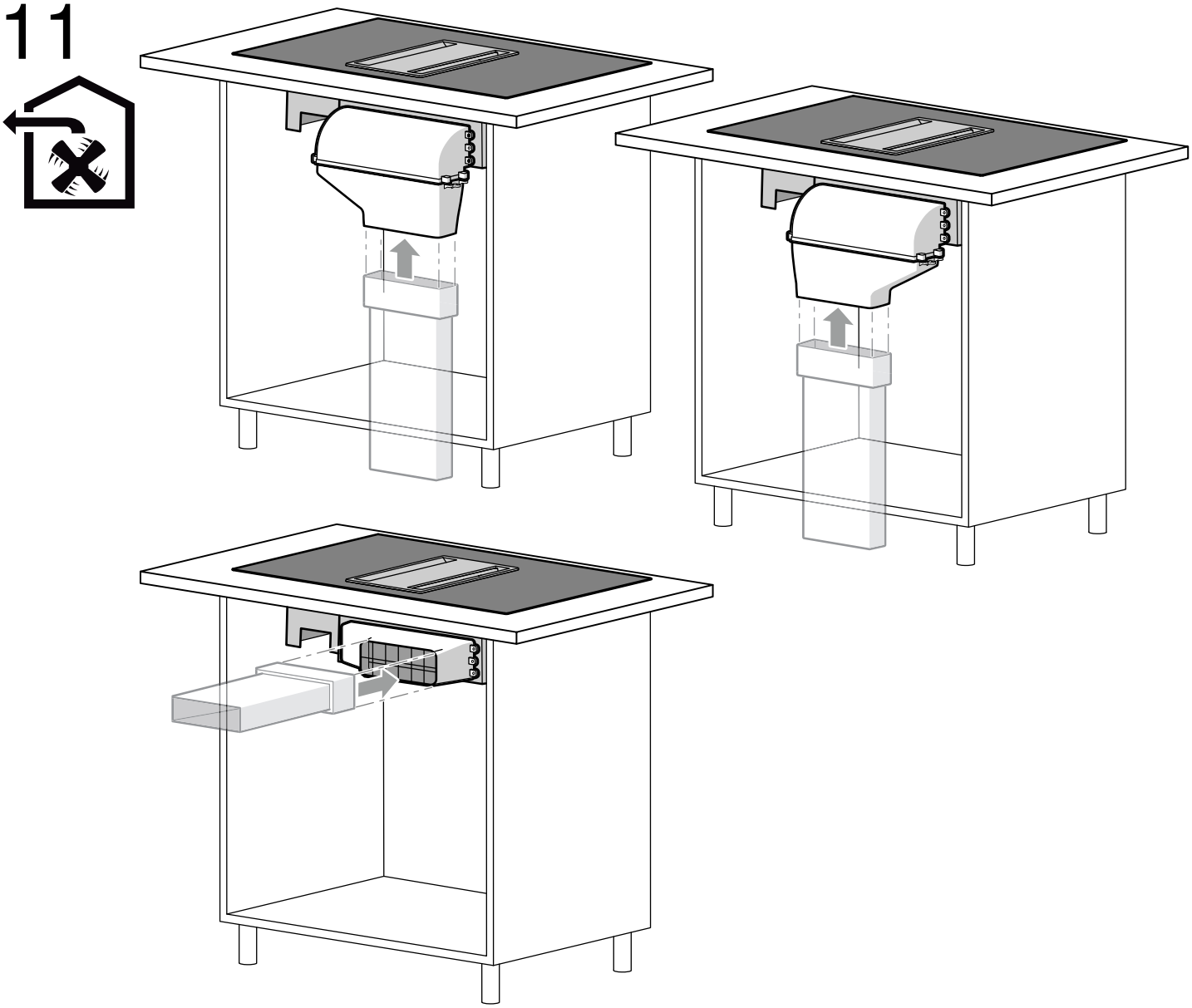

12a

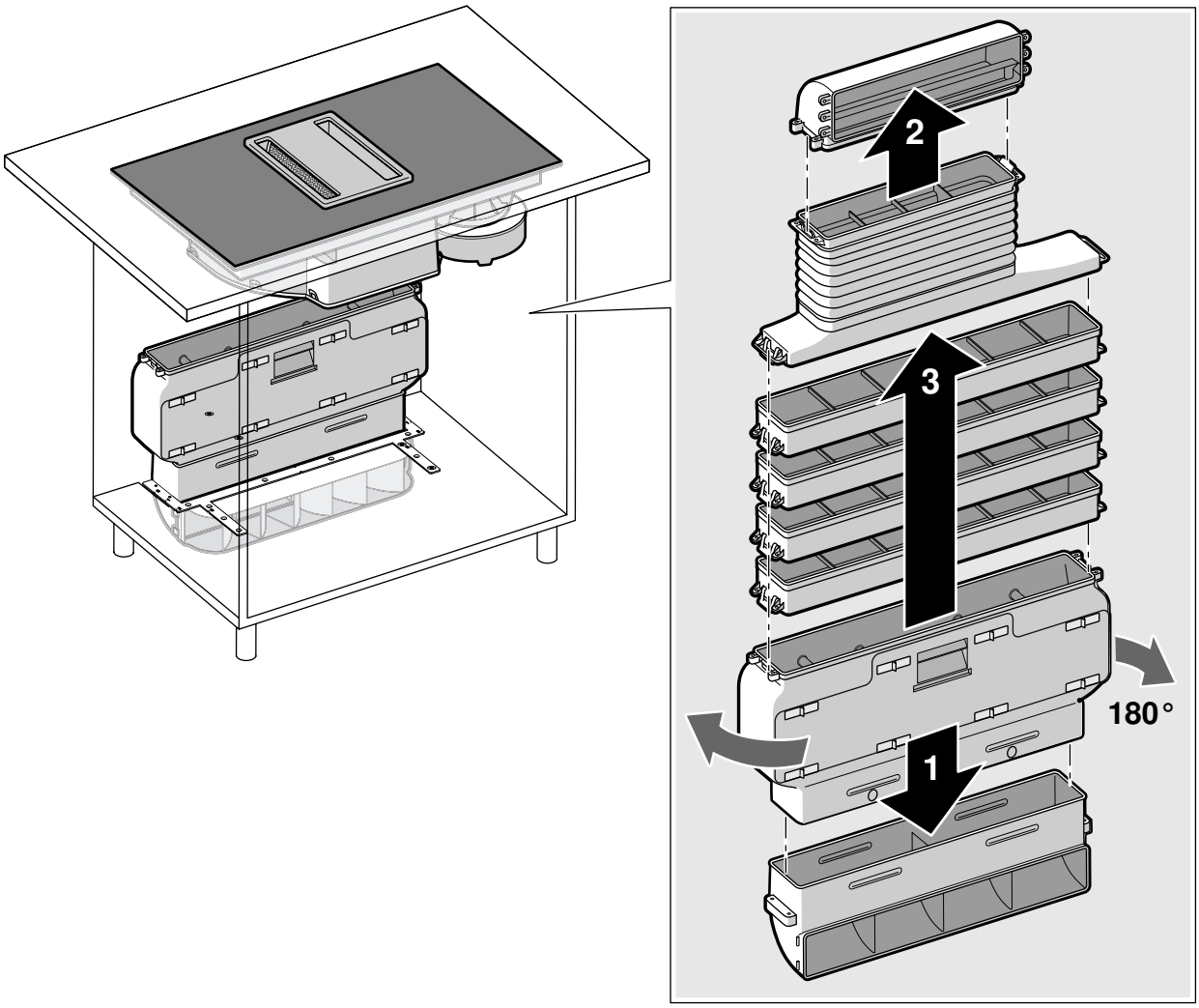

12b

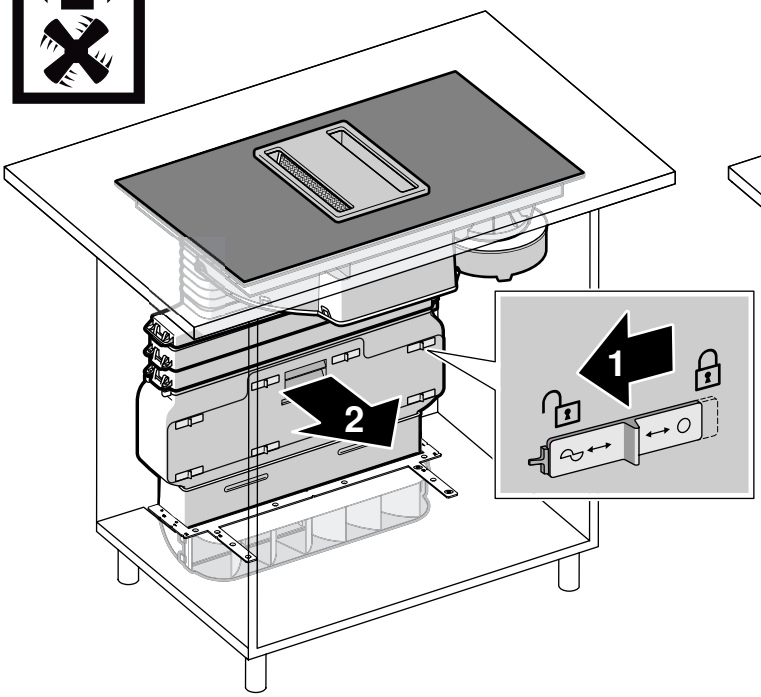

12c

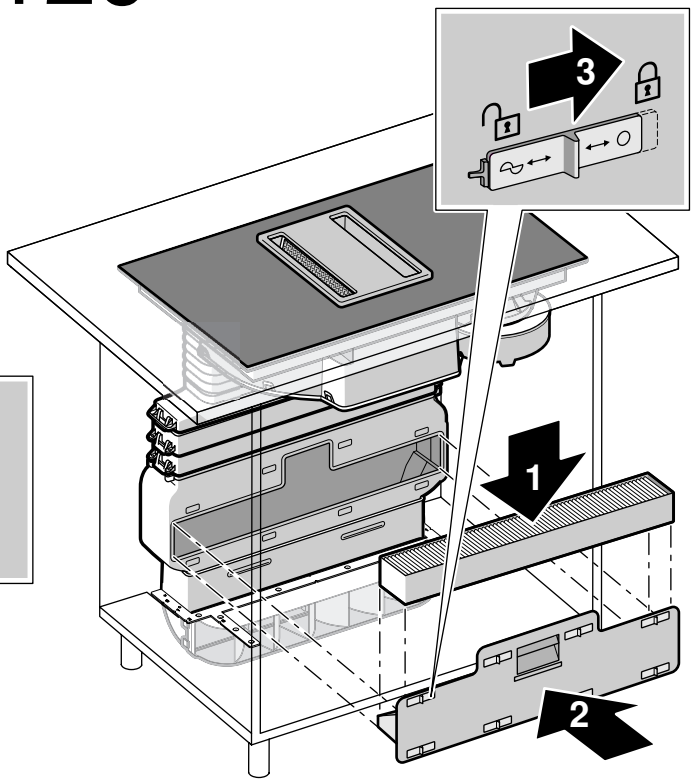

13

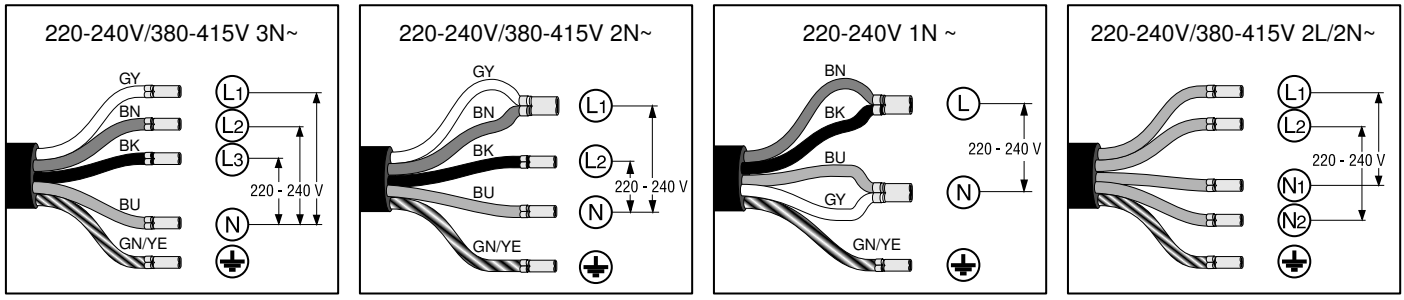

220-240V/380-415V 3N~

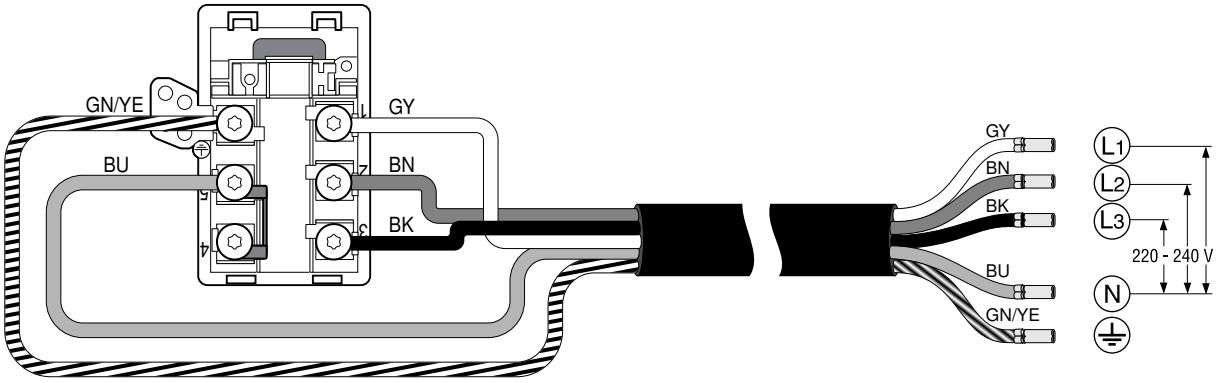

220-240V/380-415V 2N~

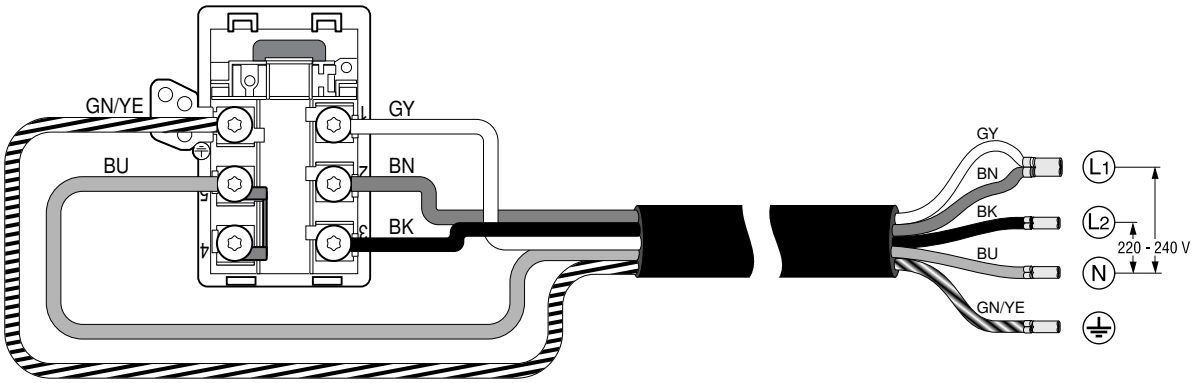

220-240V 1N~

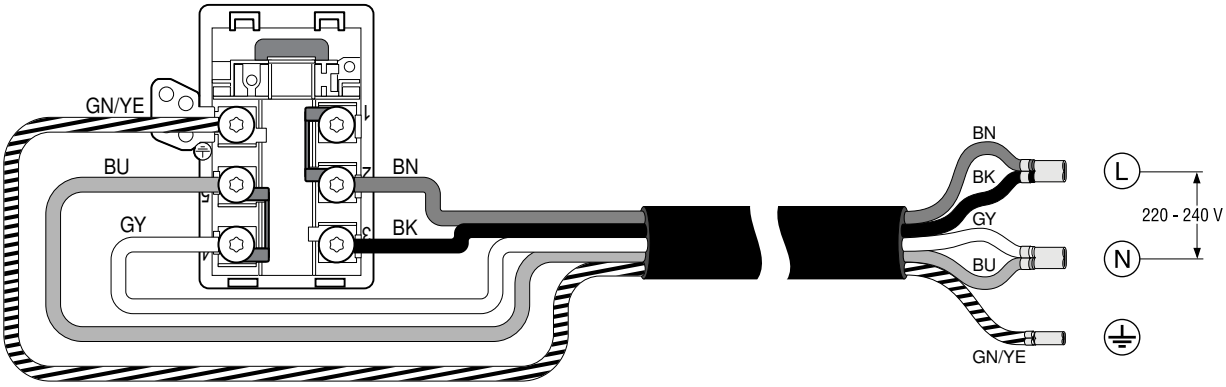

⚠ Important safety information

Read these instructions carefully. Only then will you be able to operate your appliance safely and correctly. Retain the instruction manual and installation instructions for future use or for subsequent owners.

The appliance can only be used safely if it is correctly installed according to the safety instructions. The installer is responsible for ensuring that the appliance works perfectly at its installation location.

Wearers of electronic implants!

The appliance may contain permanent magnets which may affect electronic implants, e.g. heart pacemakers or insulin pumps. Therefore, during installation, wearers of electronic implants must maintain a minimum distance of 10 cm from the appliance.

The manufacturer shall assume no liability for malfunctions or damage resulting from incorrect electrical wiring.

Power cable: This may already be connected to the connection box on the hob or is supplied with the appliance. It must only be installed by an authorised expert or by a qualified member of the after-sales service team. The required connection data can be found on the type plate and in the connection diagram.

Use only the cable that is supplied with the appliance or is provided by technical after-sales service.

Before carrying out any type of work, turn off the electricity.

For the installation, observe the currently valid building regulations and the regulations of the local electricity and gas suppliers.

When conveying the exhaust air, official and legal regulations (e.g. state building regulations) must be followed.

Danger of death!

Risk of poisoning from flue gases that are drawn back in.

Always ensure adequate fresh air in the room if the appliance is being operated in exhaust air mode at the same time as room air-dependent heat-producing appliance is being operated.

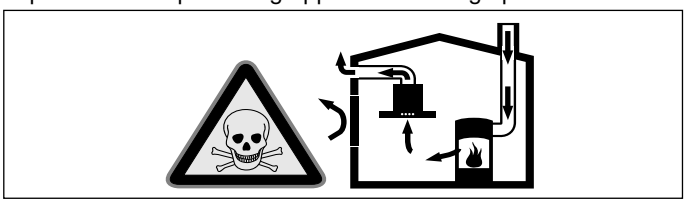

Room air-dependent heat-producing appliances (e.g. gas, oil, wood or coal-operated heaters, continuous flow heaters or water heaters) obtain combustion air from the room in which they are installed and discharge the exhaust gases into the open air through an exhaust gas system (e.g. a chimney).

In combination with an activated vapour extractor hood, room air is extracted from the kitchen and neighbouring rooms - a partial vacuum is produced if not enough fresh air is supplied. Toxic gases from the chimney or the extraction shaft are sucked back into the living space.

- Adequate incoming air must therefore always be ensured.
- An incoming/exhaust air wall box alone will not ensure compliance with the limit.

Safe operation is possible only when the partial vacuum in the place where the heat-producing appliance is installed does not exceed 4 Pa (0.04 mbar). This can be achieved when the air needed for combustion is able to enter through openings that cannot be sealed, for example in doors, windows, incoming/exhaust air wall boxes or by other technical means.

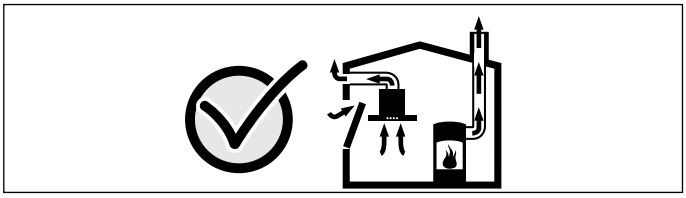

In any case, consult your responsible Master Chimney Sweep. He is able to assess the house's entire ventilation setup and will suggest the suitable ventilation measures to you.

Unrestricted operation is possible if the vapour extractor hood is operated exclusively in the circulating-air mode.

Risk of death!

Risk of poisoning from flue gases being drawn back in. When installing a ventilation system in an open-flued boiler, the electricity supply to the ventilation system must be provided with a suitable safety switch.

Risk of fire!

Grease deposits in the grease filter may catch fire. Never work with naked flames close to the appliance (e.g. flambéing). Do not install the appliance near a heat-producing appliance for solid fuel (e.g. wood or coal) unless a closed, non-removable cover is available. There must be no flying sparks.

Risk of injury!

- Changes to the electrical or mechanical assembly are dangerous and may lead to malfunctions. Do not make any changes to the electrical or mechanical assembly.
- Parts that are accessible during installation may have sharp edges. Wear protective gloves.
- The appliance is heavy. To move the appliance, 2 people are required. Use only suitable tools and equipment.
- There is a risk of injury while the fan is rotating. Do not switch the appliance on until it has been installed. Never reach into the air extraction opening on the rear of the appliance while it is in operation.

Danger of suffocation!

Packaging material is dangerous to children. Never allow children to play with packaging material.

Do not install this appliance on boats or in vehicles.

Hob: flat, horizontal, stable. Follow the hob manufacturer's instructions.

If the thickness of the worktop into which the hob is installed does not comply with the specifications, reinforce the worktop using a fire- and water-resistant material until it reaches the minimum thickness. Otherwise, sufficient stability cannot be guaranteed.

- The worktop into which the hob is installed should withstand loads of approx. 60 kg.
- Only check the evenness of the hob after it has been installed.

Notes

- To level the appliance, do not use connecting pieces at individual points.
- Adjustments to the work surface must be carried out by a specialist service provider in accordance with the installation diagram. The cutting edge must be clean and precise because the edge is visible on the surface. Clean the cutting edges with a suitable cleaning agent and degrease them.

General information

The surfaces of the appliance are easily damaged. Avoid damaging them during installation.

Exhaust air mode

Note: The exhaust air must not be conveyed into a functioning smoke or exhaust gas flue or into a shaft that is used to ventilate rooms in which heating appliances are installed.

If the exhaust air is to be conveyed into a non-functioning smoke or exhaust gas flue, you must obtain the consent of the heating engineer responsible.

Exhaust duct

Note: The appliance manufacturer does not provide any warranty for faults attributable to the pipe section.

- The appliance achieves its optimum performance by means of a short, straight exhaust air pipe and as large a pipe diameter as possible.
- As a result of long, rough exhaust air pipes, many pipe bends or pipe diameters that are smaller than 150 mm, the optimum extraction performance is not achieved and fan noise is increased.
- The pipes or hoses for laying the exhaust air line must consist of non-combustible material.
- If the exhaust air is conveyed through the outer wall, a telescopic wall box should be used.

Risk of damage from returning condensate. Install the exhaust duct in such a way that it falls away from the appliance slightly (1° slope).

Round pipes

An inside diameter of 150 mm is recommended.

Flat ducts

The inside cross-section must be the same as the diameter of the round pipes.

dia. 150 mm ca. 177 cm²

- Flat ducts should not have any sharp bends.
- Use sealing strips for different pipe diameters.

Circulating-air mode

Note: The appliance must only be operated when it is securely installed and the pipework is connected.

Electrical connection

The required connection information is on the appliance's identification plate.

This appliance complies with the EC interference suppression regulations.

Only a licensed professional may connect the appliance. The appliance must be installed in accordance with the most recent IEE (Institute of Electrical Engineers) guidelines. The appliance may be damaged if it is not connected correctly.

Make sure that the voltage of the power supply matches the value specified on the rating plate.

Make sure that the power supply is properly earthed, that the fuse protection is sufficient and the cable/wiring system in the building is sufficiently dimensioned for the electrical power of the appliance.

Comply with the following when installing the power cable:

- Ensure that the cable is not pinched or crushed.
- Keep the cable away from sharp edges.
- Ensure that the cable is not in contact with the metal casing on the underside of the appliance, as this becomes hot.

Check the household wiring before connecting the appliance. Ensure that there is sufficient fuse protection for the household wiring. The voltage and frequency of the appliance must match the electrical wiring (see rating plate).

The appliance corresponds to protection class I and must only be operated with a protective earth connection.

The wiring must have an all-pole isolating switch with a contact gap of at least 3 mm. This must still be accessible once the appliance has been installed.

Only a qualified electrician may install or replace the power cable, taking the relevant regulations into account.

When replacing the power cable, the appliance may need to be turned over. In this case, remove the filter cover and take out the container and the metal grease filter. Doing this will prevent these components from falling out.

If this appliance's power cable is damaged, it must be replaced with a H05V2V2-F power cable.

Preparing for installation

Appliance dimensions and safety clearances

- Take into account the appliance dimensions for air recirculation mode. **(Fig. A)**
- Take into account the appliance dimensions for air extraction mode. **(Fig. B)**
- Make sure that, once it is installed, there will be adequate access to the appliance for replacing the activated charcoal filter, emptying the overflow reservoir and removing the housing cover. **(Fig. C)**
- Comply with the safety clearances. **(Fig. C, 1)**

Checking the fitted unit

- The fitted unit must be level and have sufficient load-bearing capacity.
- The max. weight of the appliance is approx. **25 kg**.
- The fitted unit must be heat-resistant up to 90 °C.
- The fitted unit must still be sturdy after the cut-outs have been made.
- Use suitable supporting structural measures beneath the worktop, especially if the worktop is not very thick, to ensure that it is both robust and capable of bearing the required load.Take into account the weight of the appliance and any additional loads. The reinforcing material used must be heat and moisture resistant.
- The depth of the drawers under the appliance must be adapted depending on the pipes and the depth of the worktop. The top drawer must be removed and cannot be used.
- The clearance between the surface of the worktop and the upper area of the drawer must be 215 mm.
- Do not install ovens, refrigerators, dishwashers, washing machines or other appliances underneath the appliance.

Note: Check that the appliance is level once it has been installed in the installation opening.

Preparing the units

1. Make the cut-out in the worktop as shown in the installation drawing. **(Fig. 1)**

   Note: The angle between the cut surface and the worktop must be 90°. The cut-out edges at the sides must be flat.For laminate worktops, it may be necessary to secure strips at the sides in the cut-out.
2. To ensure that the appliance works correctly, the hob must be sufficiently ventilated. To do this, make an air outlet with a minimum cross section of 200 cm² in the base unit.
3. Comply with the minimum clearances when installing over a drawer. **(Fig. C)**
4. Remove the top drawer and attach suitable facing to the kitchen unit.

Preparing the unit and appliance for use with air recirculation mode

Making a cut-out in the unit

1. Make an air outlet in the unit's toe kick.

   Note: The air outlet must have a minimum cross section of approximately 720 cm². Make the outlet opening in the base panel as large as possible in order to keep draughts and noise to a minimum.
2. Remove the unit's back panel.
3. If necessary, remove the upper strip in the unit's back panel.
4. On the rear edge of the cut-out in the worktop, determine the centre point and mark this and the two lines vertically downwards on the bottom of the unit. **(Fig. 2a)**
5. Correctly position the fixing plate against the centre lines on the bottom of the unit. **(Fig. 2b)**
6. If drawers are fitted: Close the bottom drawer fully. If the fixing plate disappears too far underneath the drawer, move it towards the rear of the unit. Use the markings on the fixing plate to align it parallel to the centre line. **(Fig. 2c)**

   Notes

   - If the clearance between the drawer and the bottom of the unit is too small to screw the fixing plate to the bottom of the unit, turn the fixing plate 180° and screw it to the bottom of the unit from below **(Fig. 3b)**. Before you do this, align the fixing plate on the unit bottom from above to establish where it should be positioned. **(Fig. 2c)**
   - Choose the most appropriate extension based on the position of the fixing plate.
   - If the fixing plate cannot be pushed back far enough, use shallower drawers.
7. If necessary, use the fixing plate to mark out and make the cut-out in the unit bottom. **(Fig. 2d)**
8. After making the cut-out, remove any shavings.

   Note: Seal cut surfaces with heat-resistant and waterproof material.

Securely screwing on the fixing plate and clipping on the diffusor

1. If the clearance between the drawer and the bottom of the unit is sufficient, use plastic screws to secure the fixing plate to the lower flat duct bend from above. **(Fig. 3a)**

   Note: If necessary, turn the lower flat duct bend so that the air outlet is on the opposite side.
2. Use wooden screws to secure the fixing plate to the bottom of the unit from above. **(Fig. 3a)**

   Note: If the clearance between the drawer and the bottom of the unit is too small to screw the fixing plate to the bottom of the unit, turn the fixing plate 180° and screw it to the bottom of the unit from below. **(Fig. 3b)**
3. Clip the diffusor securely to the lower flat duct bend. **(Fig. 3c)**

Fitting the upper flat duct bend

1. If required, choose the extension based on the position of the fixing plate and the unit depth. The longer the extension, the deeper the drawer can be. Use four plastic screws to secure the extension to the hob's outlet opening. **(Fig. 4)**
2. Screw the upper flat duct elbow securely to the hob's outlet opening or the extension.

Preparing the unit and appliance for use with air extraction mode

1. Use four plastic screws to secure the reducing connector or flat duct elbow to the hob's outlet opening or the extension. **(Fig. 5)**

   Note: If necessary, screw the appropriate extension to the hob. Measure the permitted depth T of the drawer – make sure you leave a clearance of 10 mm from the exhaust air pipe. The depth of the drawer may vary, depending on the extension used. **(Fig. 5)**
2. Depending on the air extraction system configuration, make a cut-out in the rear panel of the unit for the exhaust air pipe, remove the rear panel of the unit or make a cut-out in the bottom of the unit.
3. After making the cut-out, remove any shavings.

   Note: Seal cut surfaces with heat-resistant and waterproof material.

Preparing for the electrical connection work

Note: Refer to the **Electrical connection** section in the **General information** chapter.

On appliances that do not have a pre-installed cable, insert the mains cable into the socket.

1. Turn the hob over and put it down on the base of the packaging, a cloth or another surface in order to prevent scratches.
2. Use a screwdriver to lift up the socket's cover. **(Fig. 6)**
3. Undo the fastening screw and use a screwdriver to lift the hose clamp. **(Fig. 7)**
4. Only connect to the mains socket as shown in the figure **(Fig. 8)**:

   BN: Brown

   BU: Blue

   GN/YE: Yellow and green

   BK: Black

   GY: Grey

   Notes

   - If required, fit the copper bridges provided as shown in the circuit diagram.
   - Ensure that the screws on the mains socket are screwed in tightly after the cables have been connected.
   - For a 2N~/3N~ connection, the live wire L1 (grey) corresponds to the fan motor.
5. Use the hose clamp to secure the mains cable and tighten the fastening screw. **(Fig. 9)**
6. Close the cover on the socket.

   Note: Arrange the cables in the central area of the mains socket in order to facilitate the fastening.

Note: If a longer power cord is required, please contact after-sales service. Connecting cables up to 2.20 m long are available.

Installing the appliance

⚠ Wearers of electronic implants!

The appliance may contain permanent magnets which may affect electronic implants, e.g. heart pacemakers or insulin pumps. Therefore, during installation, wearers of electronic implants must maintain a minimum distance of 10 cm from the appliance.

⚠ Risk of electric shock!

Components inside the appliance may have sharp edges. These may damage the connecting cable. Do not kink or pinch the connecting cable during installation.

⚠ Risk of injury!

Parts that are accessible during installation may have sharp edges. Wear protective gloves.

Installing the hob

1. Do not use silicone for sealing. **(Fig. 10a)**
2. Insert the appliance evenly into the recess. **(Fig. 10b)**
3. Attach the retaining clips supplied and tighten them carefully. Align the cooking surface with the working surface using the retaining clips. **(Fig. 10c)**

   Note: Do not use an electric screwdriver.

Connecting the appliance

Notes

- For air extraction mode, a back-pressure flap with a maximum opening pressure of 65 Pa should be installed. If a back-pressure flap is not included with the appliance, one can be ordered from a specialist retailer.
- If the exhaust air is conveyed through the outer wall, a telescopic wall box should be used.

Connecting the air extractor

1. Attach the exhaust air pipe to the flat duct bend or the reducing connector. **(Fig. 11)**
2. Connect it to the exhaust air opening.
3. Use suitable means to seal the joints.

Establishing the connection for the circulated air

1. Clip or, if necessary, screw the filter module securely to the lower flat duct bend. **(Fig. 12a)**

   Note: If necessary, turn the filter module to allow the drawer for the activated charcoal filter to be opened from the opposite side.
2. Clip the flexible connecting element securely to the upper flat duct bend.
3. Use the flexible connecting element to connect the filter module to the upper flat duct bend.

   Note: If necessary, fit extensions between the filter module and the flexible connecting element.
4. Open all of the locks on the drawer. Open the drawer. **(Fig. 12b)**
5. Insert the activated charcoal filter. **(Fig. 12c)**
6. Close the drawer.
7. Close all of the locks on the drawer.

Establishing a connection to the mains

- Voltage: See the rating plate.
- Only connect as shown in the circuit diagram **(Fig. 13)**:

  BN: Brown

  BU: Blue

  GN/YE: Green and yellow

  BK: Black

  GY: Grey
- Depending on the type of connection, the arrangement of the ferrule terminals supplied by the factory may need to be changed. To do this, the ferrule terminals may need to be shortened and the insulation removed in order to insert a ferrule terminal that connects two cables.

Note: Check that the appliance is ready for operation: If U400, E05 13 or E appears on the appliance's display, the appliance is not connected correctly.Disconnect it from the power supply and check the power cord connection.

Switching the display to air extraction mode or air recirculation mode

For air extraction mode and air recirculation mode, if necessary, switch the electronic control unit's display accordingly to the basic settings.

To do this, refer to the **Basic settings** section in the instruction manual.

Removing the appliance

1. Disconnect the appliance from the power supply.

   ⚠ Risk of electric shock !

   When disconnecting the hob from the power supply, the terminals may cause reverse voltage. The electrical connection must only be carried out by a licensed expert.
2. Remove the exhaust air duct or disconnect the air recirculation connections.
3. Push out the appliance from below.

   Caution!

   Damage to the appliance: Do not prise out the appliance from above.

⚠ 重要 安全信息

请认真阅读本手册。只有这样 才能安全正确地使用电器。 请保管好说明手册和安装说明， 以备日后使用或供下一任所有者使用。

只有根据安全说明正确安装，才能安全使用本电器。 安装工负责确保电器在安装位置上正常工作。

电子植入物佩戴者!

本设备可能包含永久磁铁，会对心脏起搏器或胰岛素泵等电子植入物造成影响。因此在安装本设备时，必须与电子植入物保持至少 10 cm 的距离。

制造商不对因电气布线错误而导致的故障或损坏承担责任。

电源线：这可能已经连接到电磁灶上的接线盒或随电器提供。它必须只能由授权的专家或具备相应资格的售后服务团队成员安装。所要求的连接数据可以在铭牌上和接线图中找到。

仅使用随电器提供或通过技术售后服务提供的电缆。

在进行任何 类型的作业前，切断电源。

安装时请遵守当前有效的建筑规范以及当地电力和燃气供应商的规范。

排放废气时，必须遵循官方规定和法律法规（例如国家建筑法规）。

有致命危险!

有烟气倒吸入房间而引起烟气中毒的危险。

如果在电器处于排风模式的同时使用依靠室内空气工作的生热电器，务必确保室内新鲜空气供应充足。

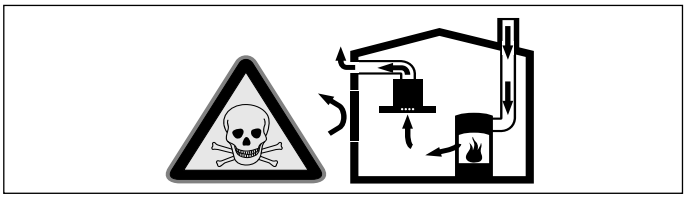

依靠室内空气工作的生热设备 (例如使用燃气、燃油、木头或煤炭的加热器、连续流加热器或热水器) 消耗所在安装室内的空气，并通过排气系统 (例如烟囱) 将废气排放到室外。

在吸油烟机开启的情况下，厨房和相邻房间内的空气会被抽走 - 如果新鲜空气供应不足，会形成局部真空。 烟道或排气井的毒气被回吸到生活区。

- 因此必须始终保证充足的进风。
- 仅靠进气/排气壁箱将无法确保房间气压符合限值。

只有在生热电器安装位置的局部真空不超过 4 Pa (0.04 mbar) 的情况下，才能实现安全操作。 只要燃烧所需的空气能够通过无法密封的开口进入房间 (例如通过门、窗、进风/排风壁箱或其它技术手段)，就能达到这个要求。

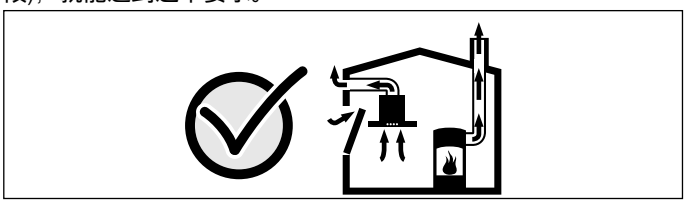

在任何情况下，都要咨询负责烟囱的烟囱清洁工。 他能够评估房屋的整个通风情况，并能建议您采取合适的通风措施。

如果吸油烟机只使用循环模式，则操作不受限制。

有生命危险!

有烟气倒吸入房间而引起烟气中毒的危险。当在开放式烟道锅炉中安装通风系统时，通风系统的电源必须配备合适的安全开关。

有着火危险!

油脂过滤器中的油脂沉积物可能会着火。切勿在电器附近使用明火 (例如用烈酒燃烧方式烹饪)。除非使用封闭、不可移动的盖板，否则请勿将电器安装在固体燃料 (例如木头或煤炭) 加热器附近。切勿有飞火。

有受伤危险!

- 对电气或机械装配元件所做的更改十分危险，可能导致电器出现故障。请勿对电气或机械装配元件进行任何更改。
- 在安装过程中碰得到的部件可能具有锋利的边缘。请戴上防护手套。
- 本电器很重。 搬动电器需要 2 人。 仅使用适当的工具和设备。
- 风扇旋转时有人身伤害危险。在安装完成前不要开启本电器。电器工作时，切勿触摸电器背面的吸油烟口。

有窒息危险!

包装材料会对儿童造成危险。 切勿让儿童玩耍包装材料。

不要将本电器安装在船上或车辆中。

电磁灶：平整、水平、稳定。遵守电磁灶制造商说明。

如果安装电磁灶的台面厚度无法满足，应使用防火防水耐磨材料加固台面，达到所需的最小厚度。否则，将不能保证其足够稳定。

- 安装电磁灶的工作台面承重量要达到60公斤以上。
- 电磁灶安装后，最好要检查其表面平整度。

提示

- 确保电器水平，不要用连接件着力在个别点上。
- 调整工作台必须与专业供应商提供的安装图保持一致。切边必须整齐、准确、边缘在表面上是可见的。用适当的清洁剂对切边进行清洁，去除油污。

常规信息

电器表面很容易损坏。安装时避免损坏电器表面。

排风模式

提示: 不得将废气排入正在使用的烟气或废气管道中，也不得排入为加热电器所在的安装室进行通风的通风井中。

如果要将废气排入停止使用的烟气或废气管道，请先征求负责此事的加热工程师的同意。

烟管

提示: 对于管路部分的故障，电器制造商不承担任何保修责任。

- 设备使用短而直的烟管可发挥最佳性能，且管径应尽可能大。
- 使用带有许多弯折或直径小于 150 mm 的长而粗糙的烟管的结果是：无法达到最佳的排风性能，且风扇噪音增加。
- 用于铺设烟管的管道或软管必须采用不可燃的材料制成。
- 如果穿过外墙排放废气，应该使用伸缩式壁箱。

冷凝水回流可能会造成电器损坏。安装烟管时，应稍微偏离电器 (倾斜1°)。

圆管

建议内部直径 150 mm。

扁平管

内部横截面必须与圆管直径大小一致。

直径 150 mm 约为 177 cm²

- 扁平管不应有任何明显弯曲。
- 对于不同的管径，使用密封条加以密封。

循环模式

提示: 电器必须安装牢固并连接至电源。

电气连接

需要的连接信息标示在电器的铭牌上。

本电器遵守 EC 射频干扰抑制规范。

只能由持有上岗证书的专业人员连接电器。必须根据最新 IEE （电气工程师协会）的指导方法安装电器。如果连接错误，电器可能会损坏。

确保电源电压与额定电压相符。

确保电源正确接入地线、建筑物管道系统中的熔断器和电线有足够的规格为电器供电。

连接电线时应遵守下列规定:

- 切勿挤压或弯折电源线。
- 电线必须远离锋利边缘。
- 电线切勿接触电器下方的金属壳体，该部位会变得很烫。

在连接电器前，检查家庭电线情况。请确保家庭电线有足够的熔断保护。电器的电压和频率必须与电线相配 (参见铭牌)。

本电器属于 I 类防护，使用时必须配备保护性接地连接。

接线必须有一个全极隔离开关，触点间隙至少为 3 mm。在电器安装完成后，必须可以操作该全极隔离开关。

只能由合格的电工安装或更换电源线，并要遵守相关的规定。

当更换电源线时，电器可能需要翻转。在这种情况下，拆下过滤器盖并取出容器和金属过滤网。 这样做可以防止这些部件脱落。

如果电器的电源线受损，必须使用 H05V2V2-F 电源线进行更换。

准备安装

电器尺寸 与安全界限

- 将空气循环模式下的电器尺寸考虑在内。**(图 A)**
- 将抽气模式下的电器尺寸考虑在内。**(图 B)**
- 一旦安装完毕，应确保有足够的电器操作权限，以更换活性炭过滤器、倒空溢流储液器和拆除外壳盖板。**(图 C)**
- 符合安全界限。**(图 C，1)**

检查橱柜

- 安装的橱柜必须水平并具有足够的承载能力。
- 电器在满载状态下的重量约为 **25 kg**。
- 固定橱柜必须能够承受最高达 90 °C 的温度。
- 在开孔之后，固定橱柜业必须坚固。
- 在工作台下方采取合适支撑结构措施，特别是在工作台不太厚的情况下，以确保其坚固耐用且承重足够。要考虑电器的重量和任何额外物品的重量。所用加固材料必须耐热、耐潮。
- 电器下方抽屉的深度必须根据管道和工作台的深度进行调节。顶部抽屉需要拆下且不能使用。
- 工作台表面和抽屉顶部的距离必须为 215 mm。
- 不能将烤箱、冰箱、洗碗机、洗衣机或其他电器安装在本电器下方。

提示: 将电器安装在安装孔中之后，检查电器是否水平。

准备橱柜

1. 确保台面开孔如安装图所示。**(图 1)**

   提示: 切割表面和橱柜操作面之间的角度必须等于 90°。侧面的裁切口边缘必须平整。对于层压板台面，有必要在开孔侧面安装填充条。
2. 为了保证电器正常工作，电磁灶必须通风充足。为此，需要在底座上开一个最小横截面为 200 cm² 的排气口。
3. 在抽屉上方安装时，要符合最小间距。**(图 C)**
4. 取下最上面的抽屉，将合适的饰面固定到橱柜上。

将橱柜和电器调整到空气循环模式的备用状态

在橱柜上开孔

1. 在橱柜的脚线上留一个排气口。

   提示: 排气口的横截面最小约为 720 cm²。确保基板上的排出口尽可能大一些，以便保证通风以及将噪音降低到最小。
2. 拆下橱柜的后面板。
3. 如有必要，请拆下橱柜后面板上的顶部条。
4. 台面开槽的后边缘上，确定中心点，然后标记下这个点，以及在橱柜底部标出两条向下垂直的竖线。**(图 2a)**
5. 根据橱柜底部的中心线正确定位安装板。**(图 2b)**
6. 如果安装了抽屉，请完全关闭底部抽屉。如果安装板在抽屉下面很远的位置上，请将其向橱柜后面移动。根据安装板上的标记，使其与中心线平行对齐。**(图 2c)**

   提示

   - 如果抽屉和橱柜底部的间距过小，无法将安装板固定到橱柜底部，请将安装板旋转 180°，然后从下面将其拧紧到橱柜底部 **(图 3b)**。执行此操作前，请从上方对齐橱柜底部的安装板，确定其正确的位置。**(图 2c)**
   - 根据安装板的位置，选择最合适的延长件。
   - 如果没有足够的空间允许安装板向后推，请使用浅一些的抽屉。
7. 如有必要，使用安装板标出界线，在橱柜底部留一个开槽。**(图 2d)**
8. 开孔完成后，清除切屑。

   提示: 用耐热耐水材料密封切割表面。

牢固地拧上安装板，然后夹紧扩散板

1. 如果抽屉和橱柜底部之间的间距充足，请使用塑料螺丝来从上面将安装板固定到下面的扁型烟管弯头。**(图 3a)**

   提示: 如有必要，请转动下面的扁型烟管弯头，让排气口位于相反方向。
2. 使用木制螺丝，将安装板从上面固定到橱柜底部。**(图 3a)**

   提示: 如果抽屉和橱柜底部的间距过小，无法将安装板固定到橱柜底部，请将安装板旋转 180°，然后从下面将其拧紧到橱柜底部。**(图 3b)**
3. 将扩散板牢固地夹紧到下面的扁型导管弯头。**(图 3c)**

安装上面的扁型烟管弯头

1. 必要时，根据固定板和橱柜深度选择延长件。延长件越长，抽屉的允许深度越大。使用四个塑料螺丝将延长件固定到电磁灶的出口。**(图 4)**
2. 将上面的扁型烟管弯头牢固地拧到电磁灶的排出口或延长件上。

将橱柜和电器调整到抽气模式的备用状态

1. 使用四个塑料螺丝将缩径连接管或弯曲扁管固定到电磁灶的出口或延长部分。**(图 5)**

   提示: 如有必要，在电磁灶上拧上合适的延长件。测量抽屉的允许深度 T - 确保与排风管留有 10 mm 的间隔。根据所使用的延长件，抽屉深度有所差异。**(图 5)**
2. 依据吸油烟系统安装规定，要为排气管在橱柜后面板开孔，拆下橱柜后面板，或者在橱柜底部开孔。
3. 开孔完成后，清除切屑。

   提示: 用耐热耐水材料密封切割表面。

准备进行电气连接操作

提示: 参见 **电器连接**部分**一般信息**章节。

在没有预先安装电线的电器上，将电源线插入插座中。

1. 翻转电磁灶的时候，要用布垫在包装底部，防止表面刮痕。
2. 使用螺丝刀将插座盖提起来。**(图 6)**
3. 拧下紧固螺丝，然后使用螺丝刀提起铝箔管固定夹。**(图 7)**
4. 必须如图 **(图 8)** 所示连接电源插座:

   BN: 棕色
   BU: 蓝色
   GN/YE: 黄绿双色
   BK: 黑色
   GY: 灰色

   提示

   - 如果需要，请按照电路图的指示，安装随附铜制连接桥。
   - 连接电缆后，确保拧紧电源插座上的螺丝。
   - 对于 2N~/3N~ 连接，火线 L1 (灰色) 对应于风扇电机。
5. 使用软管夹固定电源线，并拧紧固定螺丝。**(图 9)**
6. 关闭插座盖。

   提示: 主电源插座中央的电线排布要便于紧固。

提示: 如果需要更长的电源线，请联系售后服务。可提供长达 2.20 米的连接电缆。

安装电器

⚠ 电子植入物佩戴者!

本设备可能包含永久磁铁，会对心脏起搏器或胰岛素泵等电子植入物造成影响。因此在安装本设备时，必须与电子植入物保持至少 10 cm 的距离。

⚠ 有电击危险!

电器内的部件可能有利刃。 这可能损坏电源线。 安装时请勿缠绕或挤压电源线。

⚠ 有受伤危险!

在安装过程中碰得到的部件可能具有锋利的边缘。请戴上防护手套。

安装电磁灶台

1. 不要使用硅胶进行密封。**(图 10a)**
2. 将电器平稳地插入到安装槽。**(图 10b)**
3. 装上随产品提供的固定夹并小心拧紧。使用固定夹将灶具表面和工作台对齐。**(图 10c)**

   提示: 请勿使用电动螺丝刀。

连接电器

提示

- 对于抽气模式，必须安装最大打开压力为 65 Pa 的背压活板。如果电器未随附背压活板，可以从专业的零售商处订购。
- 如果穿过外墙排放废气，应该使用伸缩式壁箱。

连接抽气机

1. 将烟管直接安装到缩径连接件。**(图 11)**
2. 将其连接到排风管开口处。
3. 使用适合的方式密封连接部位。

接通循环风

1. 请夹牢，如有必要，将过滤组件牢固地拧紧到下面的扁型烟管弯头。**(图 12a)**

   提示: 如有必要，请拧动过滤组件，以便从相反方向打开放置活性炭过滤器的抽屉。
2. 将灵活的连接元件牢固地夹紧到上面的扁型烟管弯头。
3. 使用灵活的连接元件将过滤组件连接到上面的扁型烟管弯头。

   提示: 如有必要，请在过滤组件和灵活的连接元件之间安装延长件。
4. 打开抽屉上的所有锁。打开抽屉。**(图 12b)**
5. 插入活性碳过滤器。**(图 12c)**
6. 关闭抽屉。
7. 关闭抽屉上的所有锁。

接通电源

- 电压：参见铭牌。
- 必须按照电路图 **(图 13)** 的指示进行连接：
  BN：棕色
  BU：蓝色
  GN/YE：绿黄双色
  BK：黑色
  GY：灰色
- 根据连接类型，可能需要对工厂提供的套圈端子排列方式进行更改。要执行此操作，套圈端子可能需要缩短，并且取下绝缘套，以便插入套圈端子来连接两根电缆。

提示: 检查设备是否已准备就绪：如果 U400，EOS 13 或者 E 出现在电器的显示屏上，电器就没有正确的连接。断开电源并检查电源线。

将显示屏切换到排气模式或空气循环模式

使用抽气模式和空气循环模式操作时，如有必要，请相应地切换电控装置显示屏的基础设置。

为此，请参见说明手册中的**基本设置**一节。

拆除电器

1. 断开电器电源。

⚠ **有电击危险！**

当断开电磁灶台电源时，端子可能会导致反向电压。电气连接必须只能由持有上岗证的专业人员执行。

2. 拆下排气管，或者断开空气循环连接。

3. 从下方推出电器。

注意!

电器损坏: 不要从上面撬出电器。